TEAM® Industrial Services

NOTE: EQUIPMENT AVAILABILITY MUST BE VERIFIED BEFORE THE START OF THE JOB

NOTE: ALL WEIGHT AND DIMENSIONS ARE BASED ON AVAILABLE DATA AND SUBJECT TO CHANGE

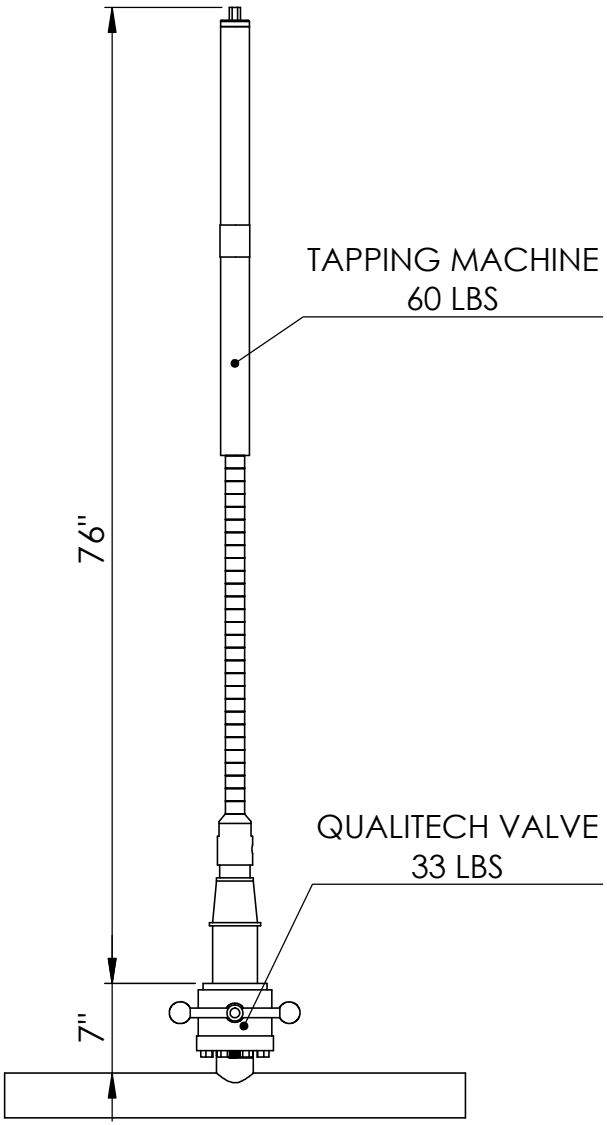

HOT TAP

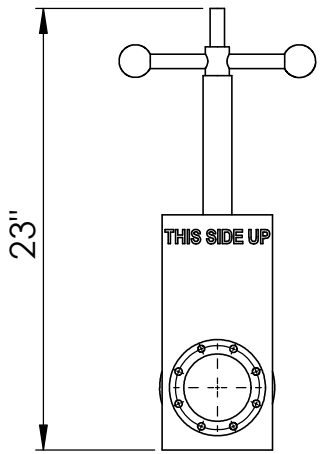

VALVE

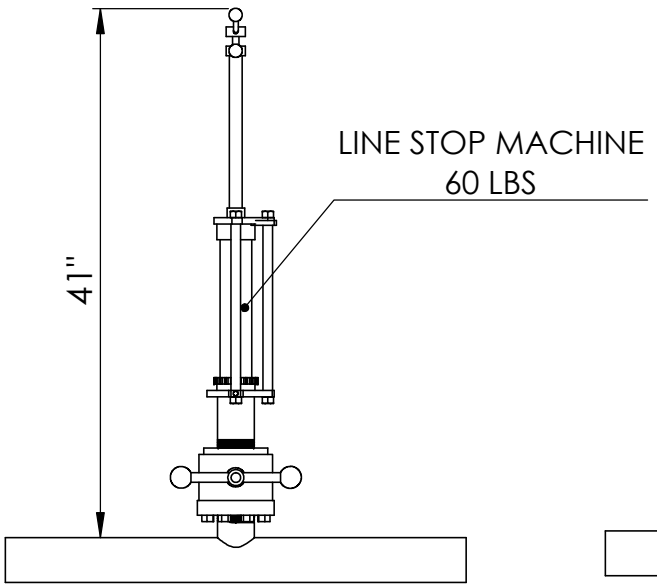

LINE STOP

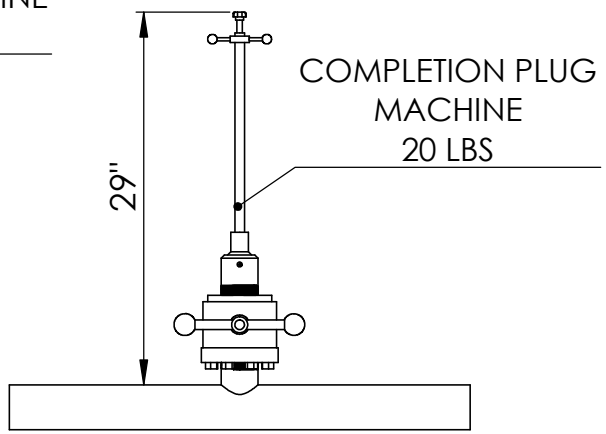

COMPLETION PLUG

2" QUALITECH LINE STOP

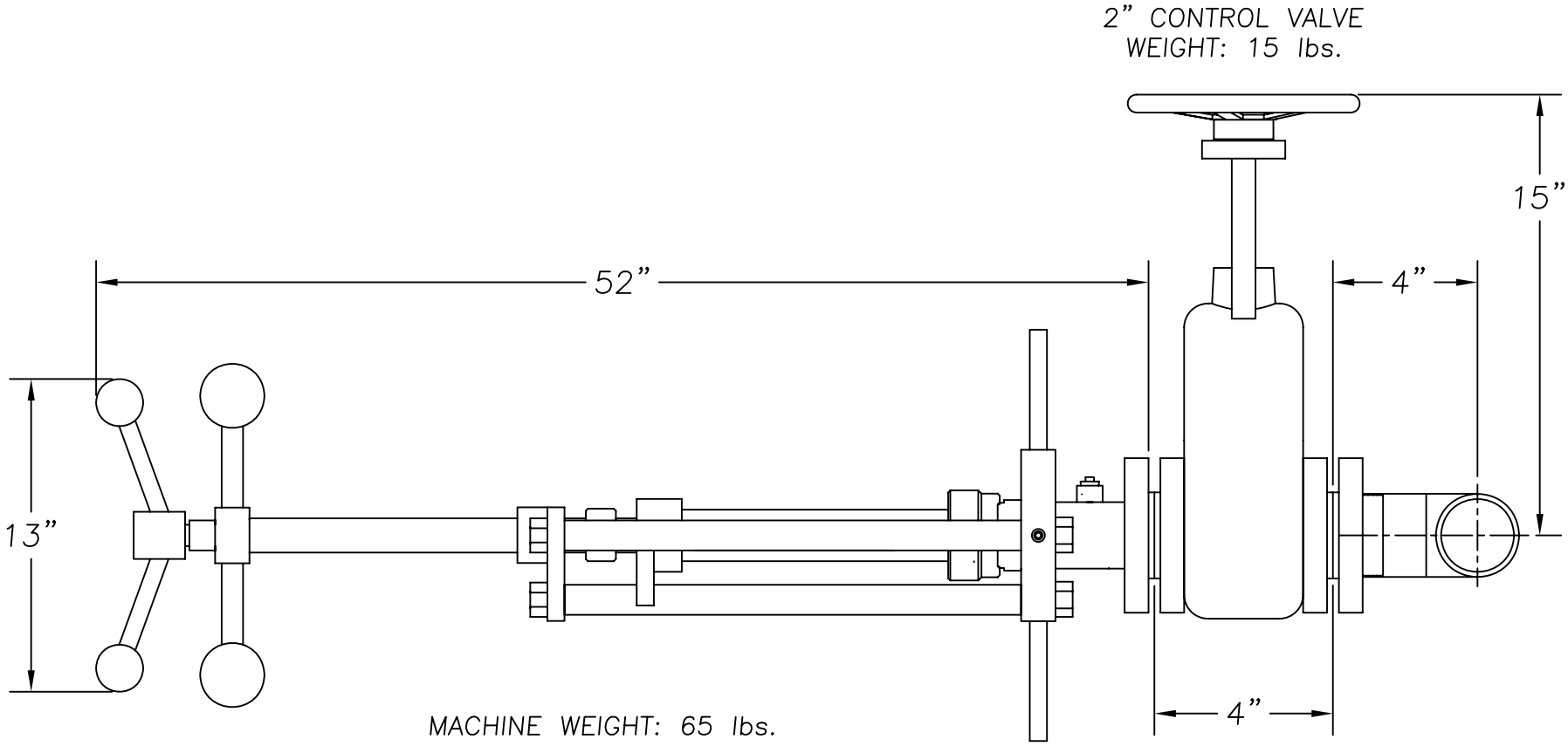

2" LINESTOP EQUIPMENT
90 lbs. TOTAL WEIGHT

2" NOZZLE
WEIGHT: 10 lbs.
INCLUDES PLUG & CAP

ECN#	MARK	REVISION	BY	DATE

FURMANITE

GENERAL FINISH 125

TOLERANCE AS SPECIFIED

DATE: 7/13/09

MATERIAL: –

SCALE: NONE

QTY. REQUIRED:

DRAWN BY: JLM

CHECKED BY:

APPROVED BY:

TITLE: GENERAL DIMENSIONS, 2" STOPPING EQUIPMENT

DRAWING NUMBER: SD–0000–6667

This drawing is the property of FURMANITE and is not to be used except as expressly authorized by this company. Copies are not to be made without permission.

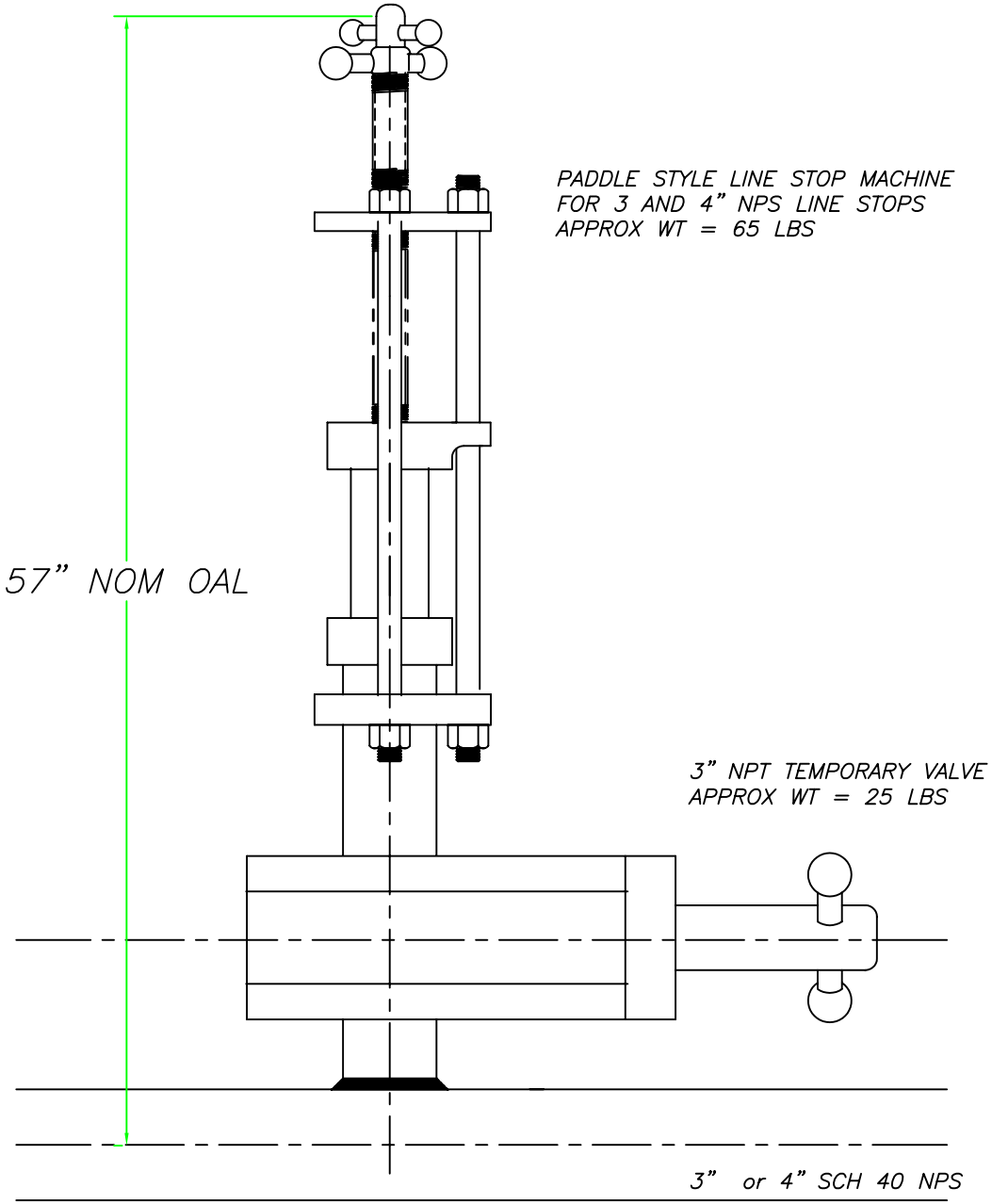

3" NPT PADDLE STYLE NOZZLE
FOR 3 AND 4" NPS LINE STOPS

SEE DETAIL 'A'

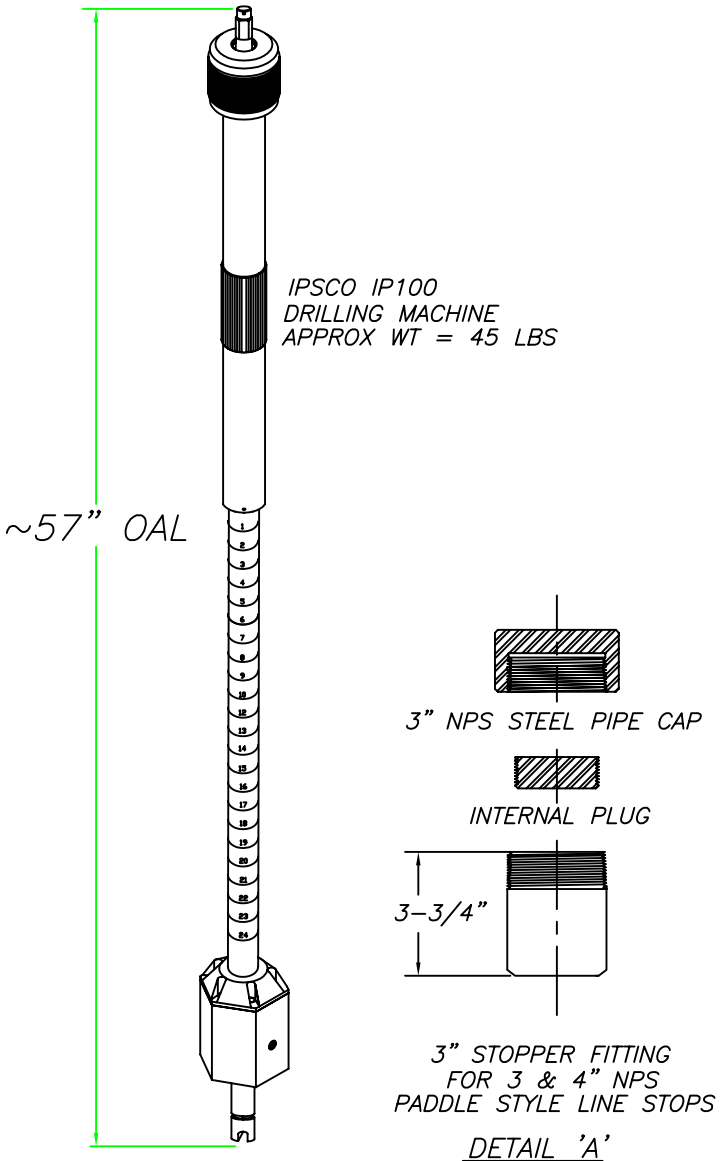

3" STOPPER FITTING
FOR 3 & 4" NPS
PADDLE STYLE LINE STOPS

DETAIL 'A'

ECN#	MARK	REVISION	BY	DATE

INTERNATIONAL PIPING SERVICES COMPANY
2900 South 21st Avenue Broadview, Illinois U.S.A.
TEL:(708) 343-1333, FAX:(708) 343-1435

GENERAL FINISH 125

TOLERANCE UNLESS OTHERWISE SPECIFIED
1 PLC DEC ±0.031
2 PLC DEC ±0.015
3 PLC DEC ±.005
FRACTION ±1/4
ANGULAR ±1°

DATE: 11/30/04
MATERIAL:
SCALE: NONE
QTY. REQUIRED:
DRAWN BY: WCG
CHECKED BY:
APPROVED BY:
DRAWING NUMBER: TD-30-0983

TITLE: PADDLE STYLE LINE STOP ON 3 & 4" SCHD 40 NPS

IPSCO is committed to being the best cost producer of a quality product, delivered on time, that meets or exceeds all customer contract requirements.

This drawing is the property of International Piping Services Company and is not to be used except as expressly authorized by this company. Copies are not to be made without permission.

"SAFETY FIRST - QUALITY ALWAYS"

ACTUATOR
WEIGHT: 60 LBS

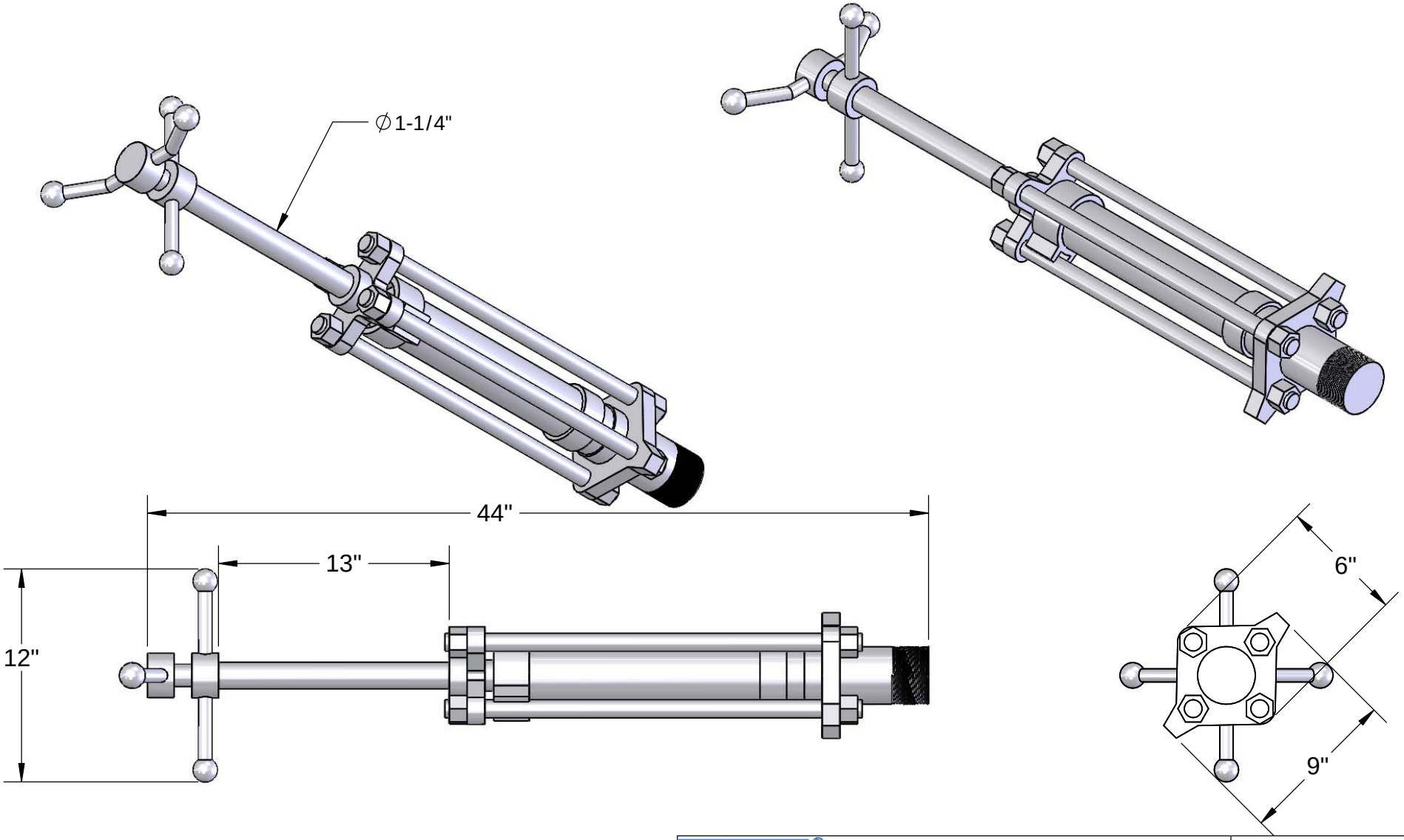

TEAM® Industrial Services, Inc.			CONFIDENTIAL AND PROPRIETARY INFORMATION
REGISTRATION # F-003143		UNLESS OTHERWISE SPECIFIED:	ENGINEERING # 308432E
DRAWN BY: DC	4/24/16	ALL DIMENSIONS TYPICAL:	WEIGHT lbs
CHECKED BY:		MACHINED SURFACES: ▽	VOID VOL. in^3 B.C.
WPS:		BREAK SHARP CORNERS: 0.005"	PERIMETER VOL. in^3 B.C.
DUKE ENERGY		TOLERANCES: FRACTIONAL ±1/32; ANGULAR ±1/2°; TWO PLACE DECIMAL ±0.01; THREE PLACE DECIMAL ±0.005	SCALE 1:8 SIZE A
		ALL DIMENSIONS IN INCHES	REV 0
			SHEET 1 OF 3
			SafetyFirst In Everything We Do

"SAFETY FIRST - QUALITY ALWAYS"

VALVE
WEIGHT: 42 LBS

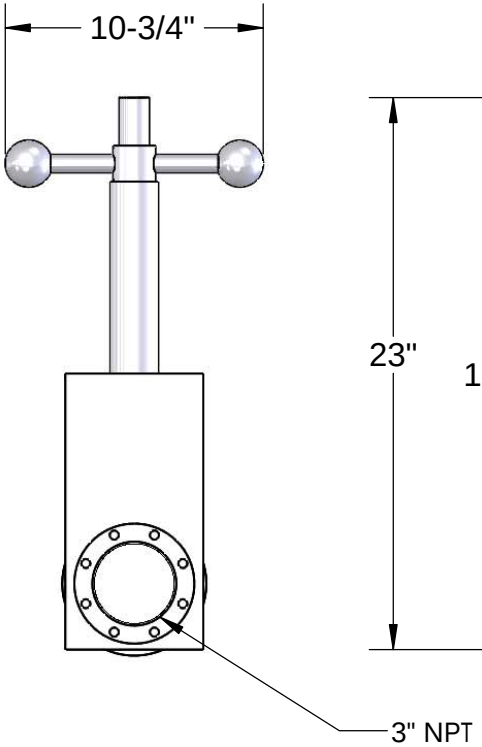

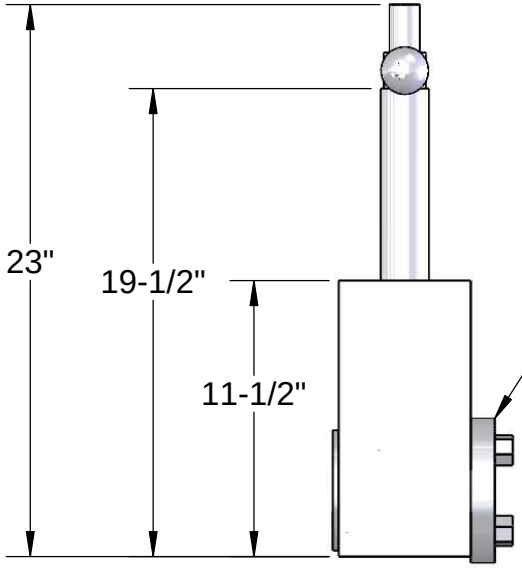

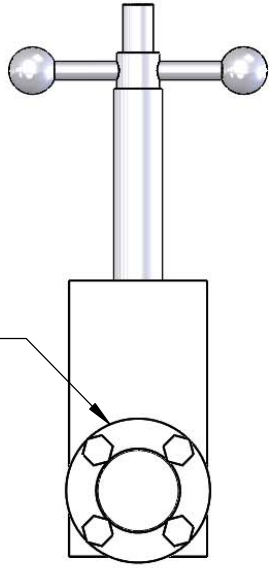

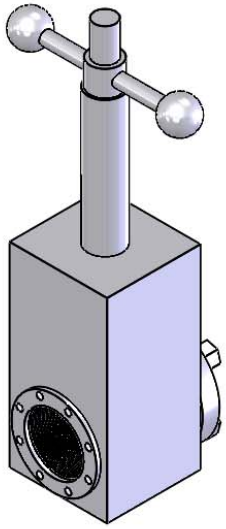

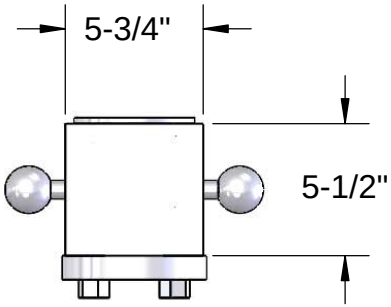

TEAM® Industrial Services, Inc.			CONFIDENTIAL AND PROPRIETARY INFORMATION
REGISTRATION # F-003143		UNLESS OTHERWISE SPECIFIED:	ENGINEERING # 308432E
DRAWN BY: DC	4/24/16	ALL DIMENSIONS TYPICAL:	WEIGHT lbs
CHECKED BY:		MACHINED SURFACES: ▽	VOID VOL. in^3 B.C.
WPS:		BREAK SHARP CORNERS: 0.005"	PERIMETER VOL. in^3 B.C.
DUKE ENERGY		TOLERANCES: FRACTIONAL ±1/32; ANGULAR ±1/2°; TWO PLACE DECIMAL ±0.01; THREE PLACE DECIMAL ±0.005	SCALE 1:8 SIZE A
		ALL DIMENSIONS IN INCHES	REV 0
			SHEET 2 OF 3

SafetyFirst In Everything We Do

"SAFETY FIRST - QUALITY ALWAYS"

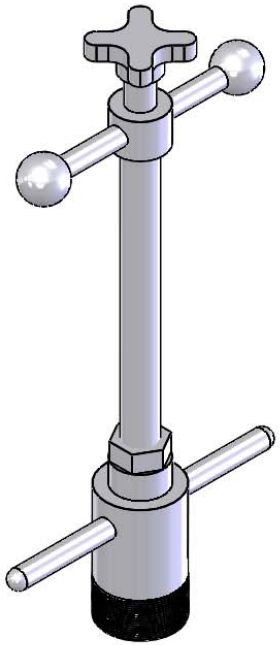

PLUG SETTER
WEIGHT: 14 LBS

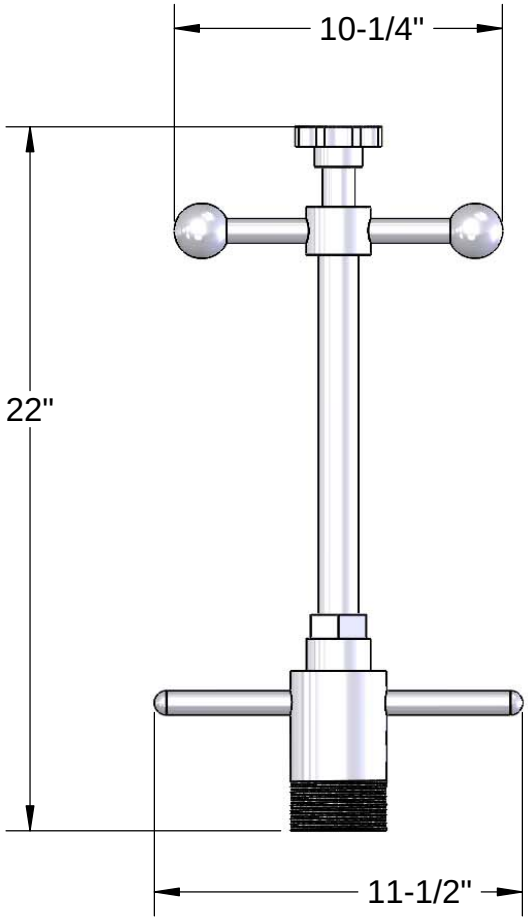

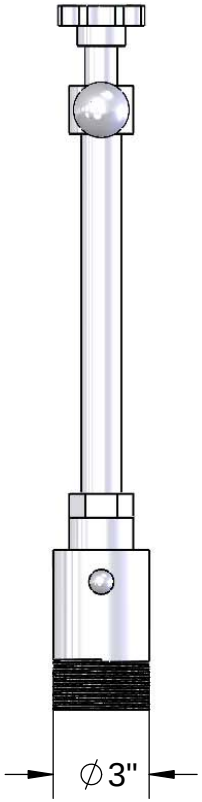

TEAM® Industrial Services, Inc.			CONFIDENTIAL AND PROPRIETARY INFORMATION
REGISTRATION # F-003143		UNLESS OTHERWISE SPECIFIED:	ENGINEERING # 308432E
DRAWN BY: DC	4/24/16	ALL DIMENSIONS TYPICAL:	WEIGHT lbs
CHECKED BY:		MACHINED SURFACES: ▽	VOID VOL. in^3 B.C.
WPS:		BREAK SHARP CORNERS: 0.005"	PERIMETER VOL. in^3 B.C.
DUKE ENERGY		TOLERANCES: FRACTIONAL ±1/32; ANGULAR ±1/2°; TWO PLACE DECIMAL ±0.01; THREE PLACE DECIMAL ±0.005	SCALE 1:6 SIZE A
		ALL DIMENSIONS IN INCHES	REV 0
			SHEET 3 OF 3

SafetyFirst In Everything We Do

LINE-STOP MACHINE

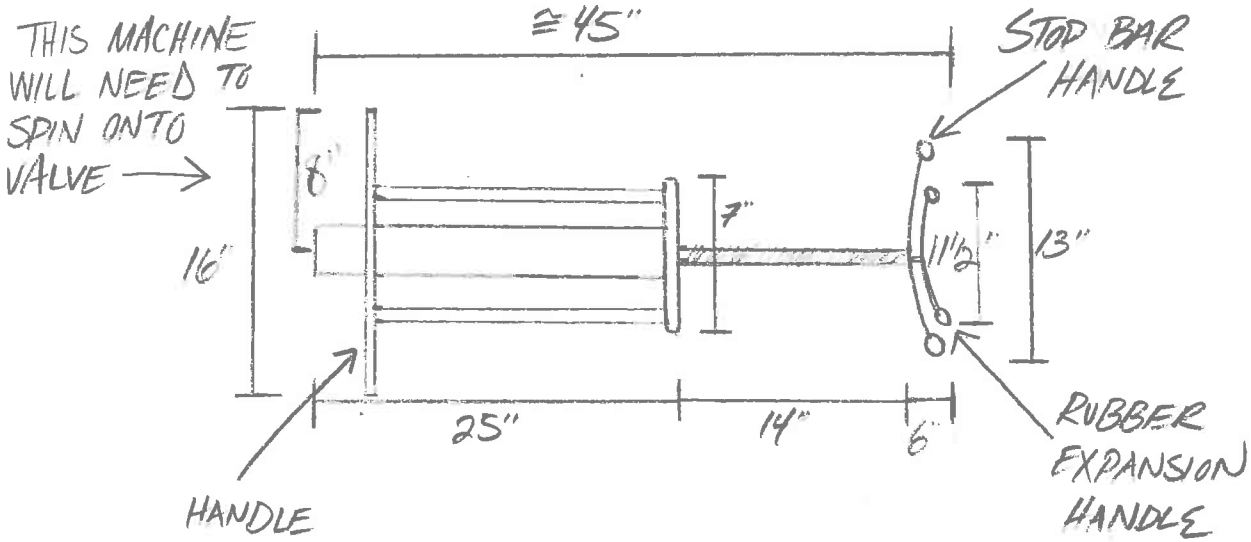

LINE-STOP VALVE

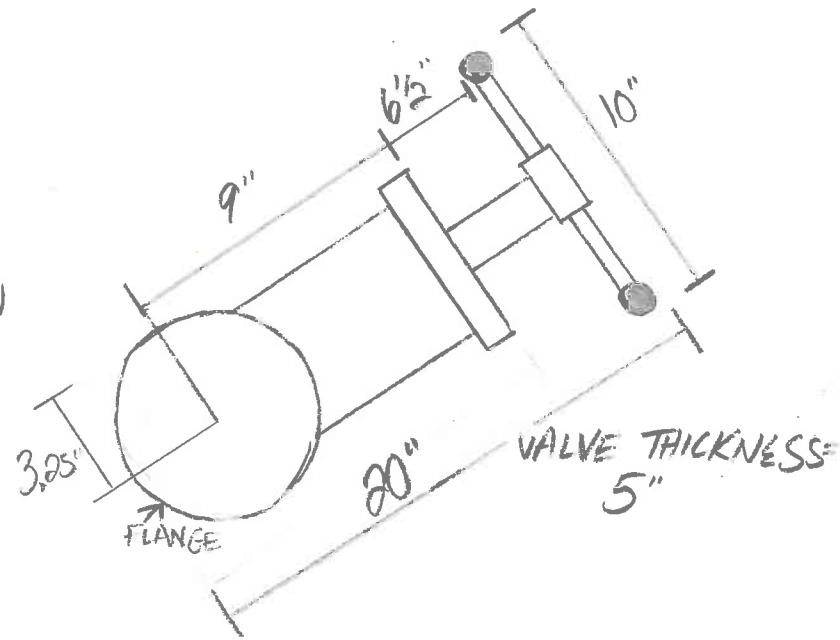

LINE-STOP FITTING

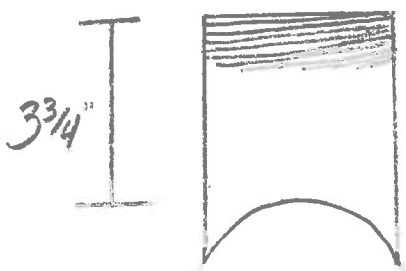

LINE STOP HOT-TAPPING MACHINE

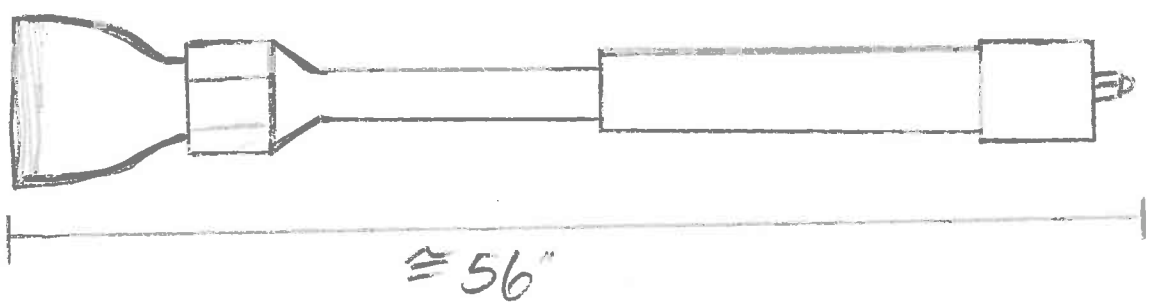

GREATEST TOTAL DISTANCE FROM TOP OF PIPE ≅ 5'5"

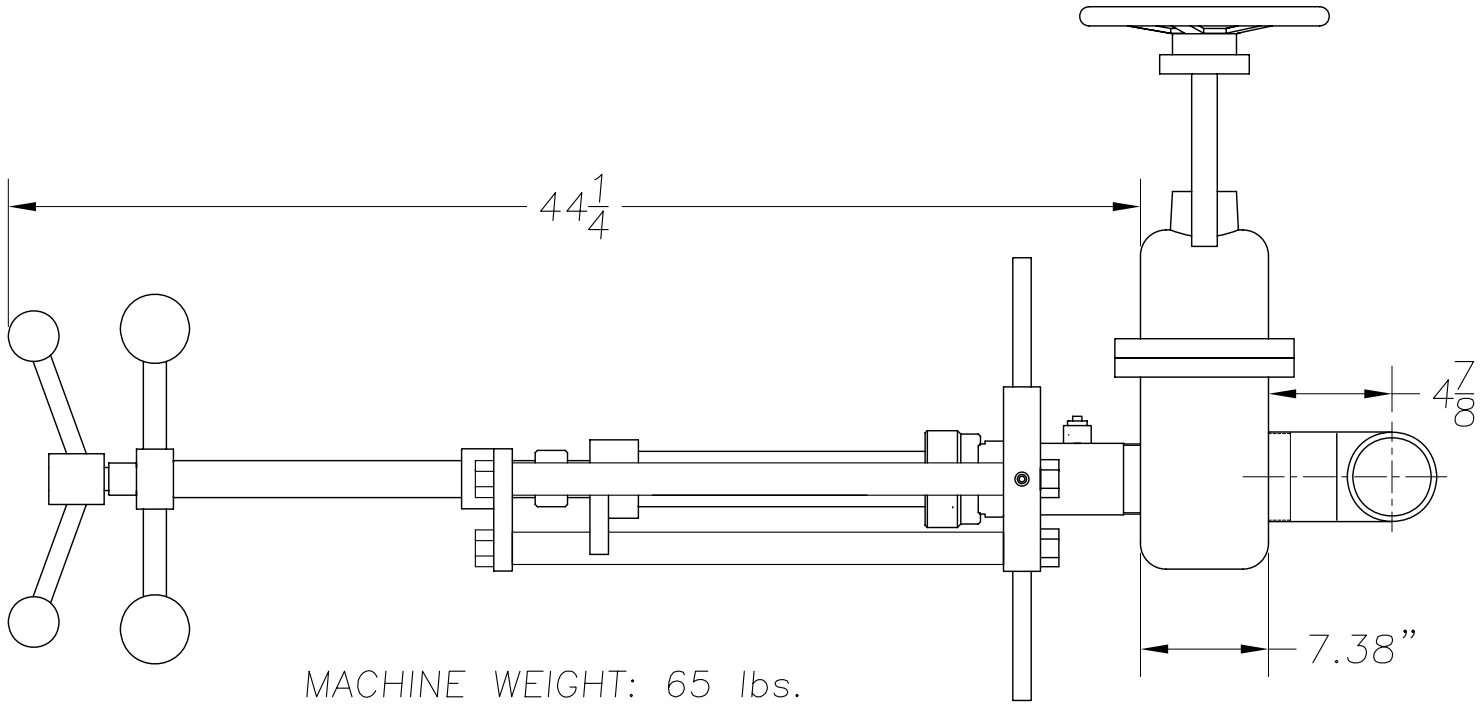

3" NOZZLE
WEIGHT: 10 lbs.
INCLUDES PLUG & CAP

3" LINESTOP EQUIPMENT
155 lbs. TOTAL WEIGHT

ECN#	MARK	REVISION	BY	DATE
	A	ADDED TOTAL WEIGHT	GJD	7/6/99

FURMANITE

TITLE: GENERAL DIMENSIONS, 3" STOPPING EQUIPMENT

GENERAL FINISH 125

TOLERANCE AS SPECIFIED

DATE: 6/9/99

MATERIAL: —

SCALE: NONE

QTY. REQUIRED:

DRAWN BY: GJD

CHECKED BY:

APPROVED BY:

DRAWING NUMBER: SD-0000-4229

This drawing is the property of FURMANITE and is not to be used except as expressly authorized by this company. Copies are not to be made without permission.

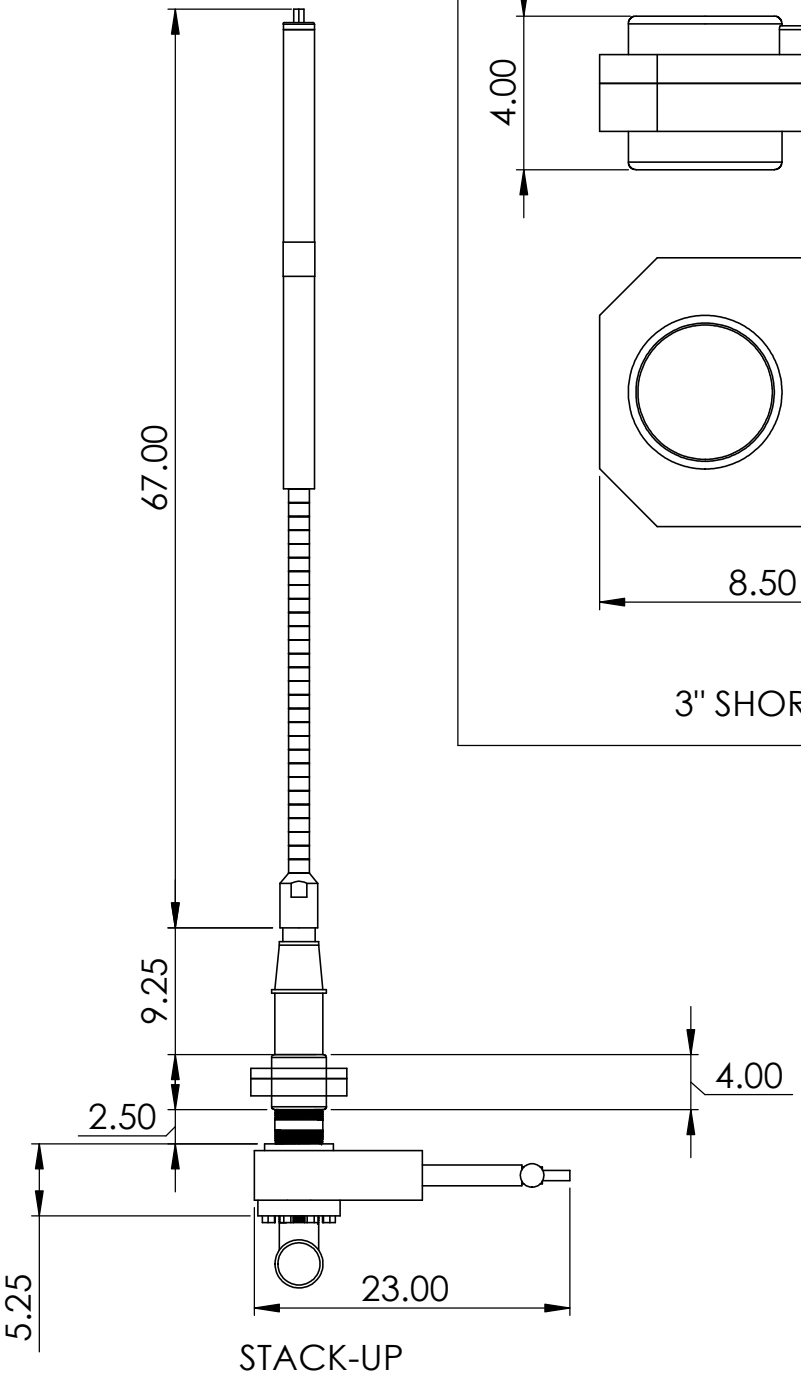

STACK-UP
TAPPING MACHINE 60 LBS

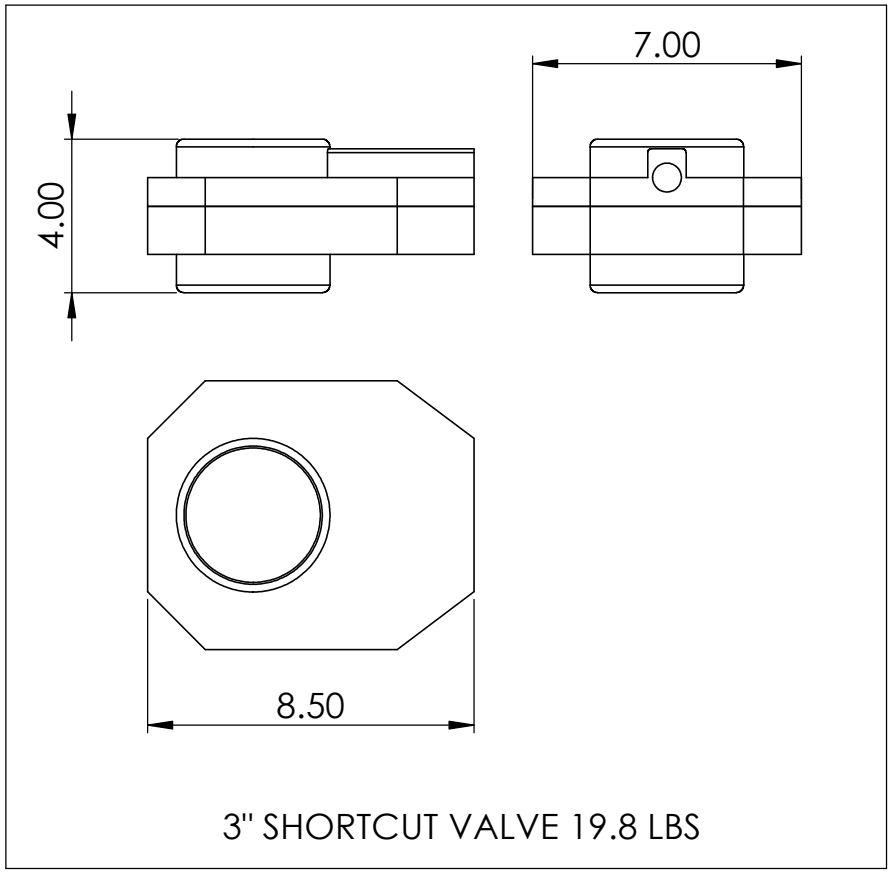

3" SHORTCUT VALVE 19.8 LBS

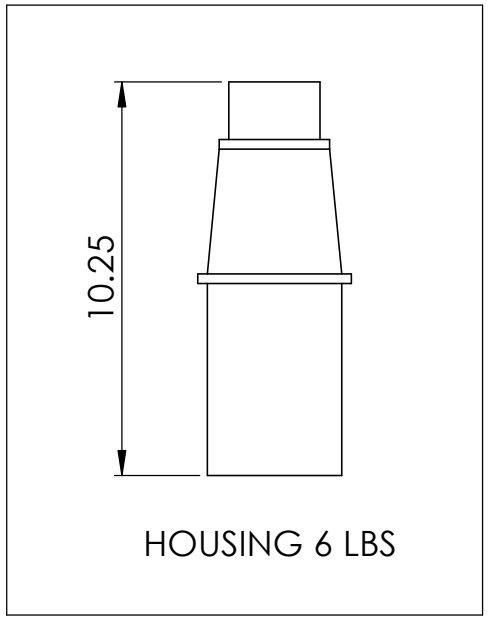

HOUSING 6 LBS

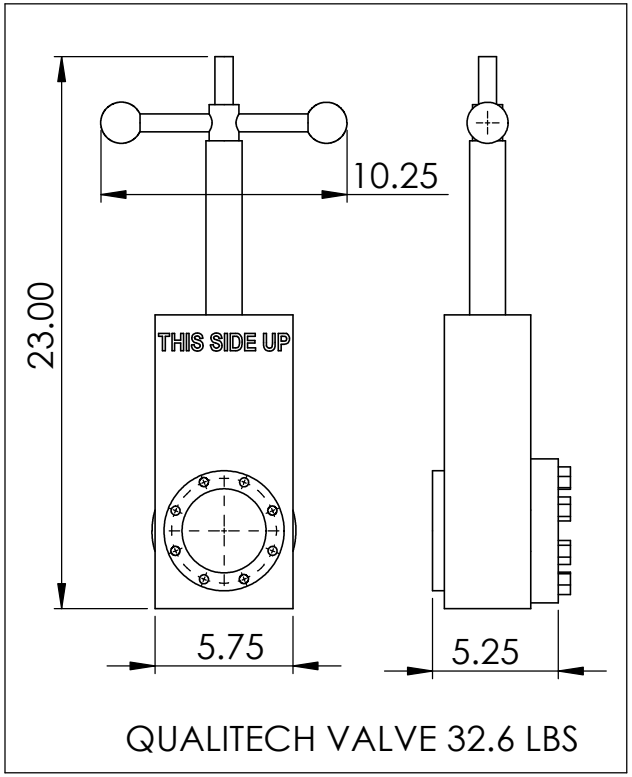

QUALITECH VALVE 32.6 LBS

TEAM® Industrial Services

NOTE: EQUIPMENT AVAILABILITY MUST BE VERIFIED BEFORE THE START OF THE JOB

NOTE: ALL WEIGHT AND DIMENSIONS ARE BASED ON AVAILABLE DATA AND SUBJECT TO CHANGE

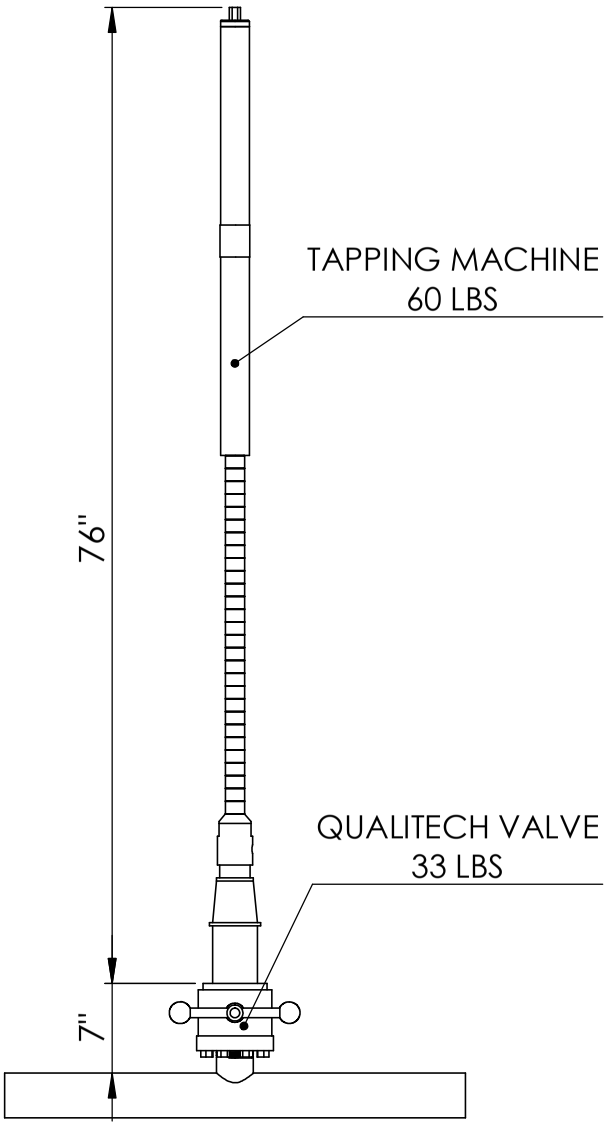

HOT TAP

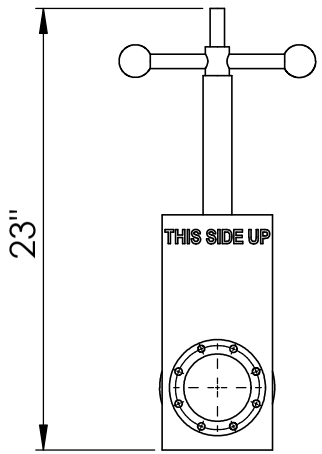

VALVE

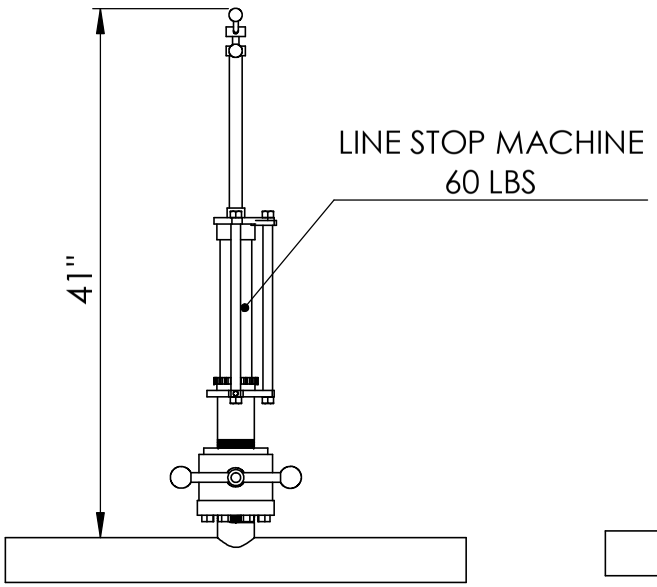

LINE STOP

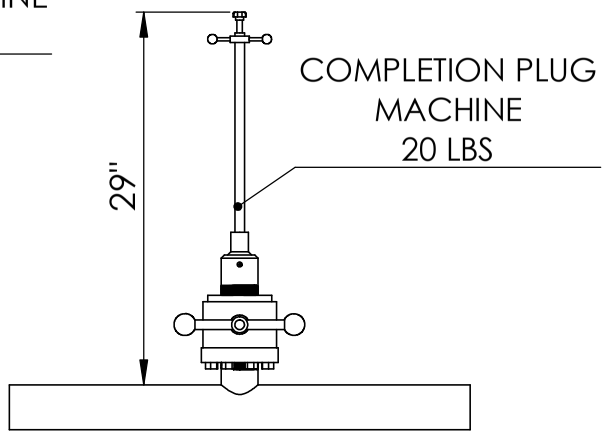

COMPLETION PLUG

2" QUALITECH LINE STOP